CATALOG

Zenith ZTG series Automatic Transfer Switches

ZTG(D) series ATS, 30-1200 A, 200-480 Vac

- Easy to Install and Commission
- Continuous Operation
- Data and Connectivity

—

Powered by TruONE™ technology, Zenith ZTG series automatic transfer switches incorporate switch and controller in one seamless, self-contained unit, reducing the number of wires and connections. This design saves room in the enclosure and minimizes the potential for connection failures. In addition, the design incorporates modular components to reduce downtime and service costs, and an optimum interface for advanced control, connectivity, and energy efficiency.

Table of contents

Zenith ZTG series

Continuous power. Non stop innovation.

Easy to Install and Commission

Start up in minutes, not hours.

The new Zenith ZTG series weighs up to 30% less than comparable ATS models but has up to 25% more wire-bending space, making it especially easy for contractors to install.

Once sources are connected, an innovative auto-configure function via the HMI sets electrical system parameters in seconds. Because of TruONE™ technology, no additional control wiring or troubleshooting is required on-site. And any programming changes can be done from the HMI with a few keystrokes, making commissioning quick and painless. You can even configure Zenith ZTG on site before installation – using a laptop with Ekip Connect 3 Software, even without any external power supply.

Continuous Operation

Minimize unplanned outages.

Zenith ATS solutions are tested to last up to 6,000 cycles. Based on 10 transfers per month, that's 50 years of reliable operation! If things ever do go wrong, all critical modules are customer-replaceable to simplify service and significantly reduce downtime and service costs. Say goodbye to blinking lights and stopping motors.

Advanced Data and Connectivity

Make data-driven decisions.

The Zenith ZTG now features cloud-based connectivity through the ABB Ability™ Energy and Asset Manager. ABB Ability simplifies implementation and use of Zenith transfer switches in coordination with other ABB devices, ensuring one common user interface and one common software environment. Market-leading modular communication with seven protocols ensures easy installation and connectivity now and far into the future.

Zenith ZTG series

Continuous power. Non stop innovation.

Optimum Interface

Frustration-free programming.

The LCD HMI on Zenith is easily navigated, password protected, and allows access to features ranging from programmable set-points, time delays, digital I/O and exercisers to switch status, events, and diagnostics.

In addition, Ekip Connect computer software is an alternative to the HMI that makes programming a cinch whether you're in the office, or on-site. With this tool, you can import, export, or modify ATS settings via the USB port located on the HMI with no need to apply power to the unit.

More advantages. Greater power security.

Speed Up Your Project

Now you can speed up your project even more, thanks to automatic commissioning capabilities. Premade configuration files can be uploaded from your PC to the controller via USB or Bluetooth, minimizing the risk of human error and reducing programming time by 80%.

Optimized Logistics

Leveraging ABB TruONE all-in-one engineering, Zenith features a wide voltage range from 200 to 480 VAC (with +/-20% tolerance), reducing the need to stock multiple SKUs, so you can reduce inventory and save space in the warehouse.

Integrated and Future-Ready

Not ready to make the jump to digital yet? No problem. ABB Zenith features plug-in factory and field-mount accessorizing. You'll never need extra space inside the panel for any future upgrades.

Energy Efficiency

Select Zenith models feature full compatibility with ABB Ability™ Energy and Asset Manager, allowing data processing from the site's electrical equipment to deliver analysis and make recommendations for optimizing the electrical system's performance. This enables remote monitoring of plants, energy consumption and costs at a glance, making implementation of energy management strategies easier and faster.

Safety and Protection

Unlike typical ATS solutions, Zenith enables safe emergency manual operation—even under load—without opening the panel door when the HMI is mounted to the ATS frame. With controller and power supply embedded in the power panel, there are no dangerous line voltages to the door, so the risk of operator injury due to equipment malfunction is reduced.

Affordable Range

With the right solution to match the application, ABB Zenith provides top value for your specific needs—from optional stand-by power to even the most critical uninterruptable processes—with the most comprehensive ATS portfolio on the market

—

Compliant with the standards you trust

- cULus (UL 1008) listed
- NFPA 70, 99, 101, and 110
- IEEE 446 and 241
- NEMA ICS 10
- Seismic (certification in process)
    - IBC-2015
    - IEEE-693-2005
- UL 508
- UL 50, NEMA 250, and NEMA ICS 6

Taking ATS performance to new heights.

Bring the highest level of convenience, efficiency and critical power security to your product, project or facility.

ZTG is the superior solution for:
- Generator dealers
- Electrical contractors
- Distributors
- Consultants and engineers
- Facilities managers

ZTG provides superior critical power security for:
- Commercial buildings
- Industrial buildings
- Sports arenas
- Airports
- High-rise buildings
- Education and government
- Financial environments
- And more

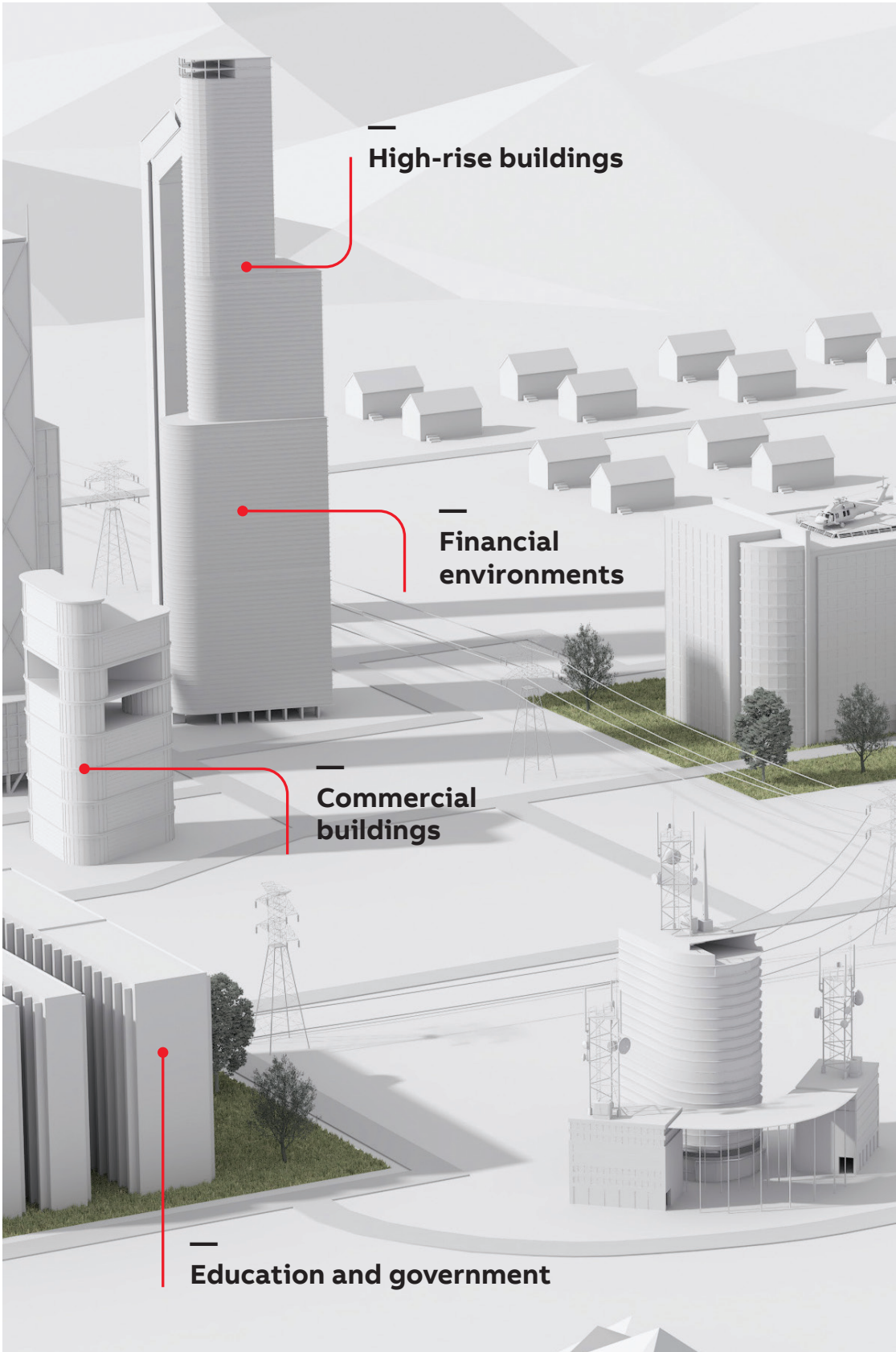

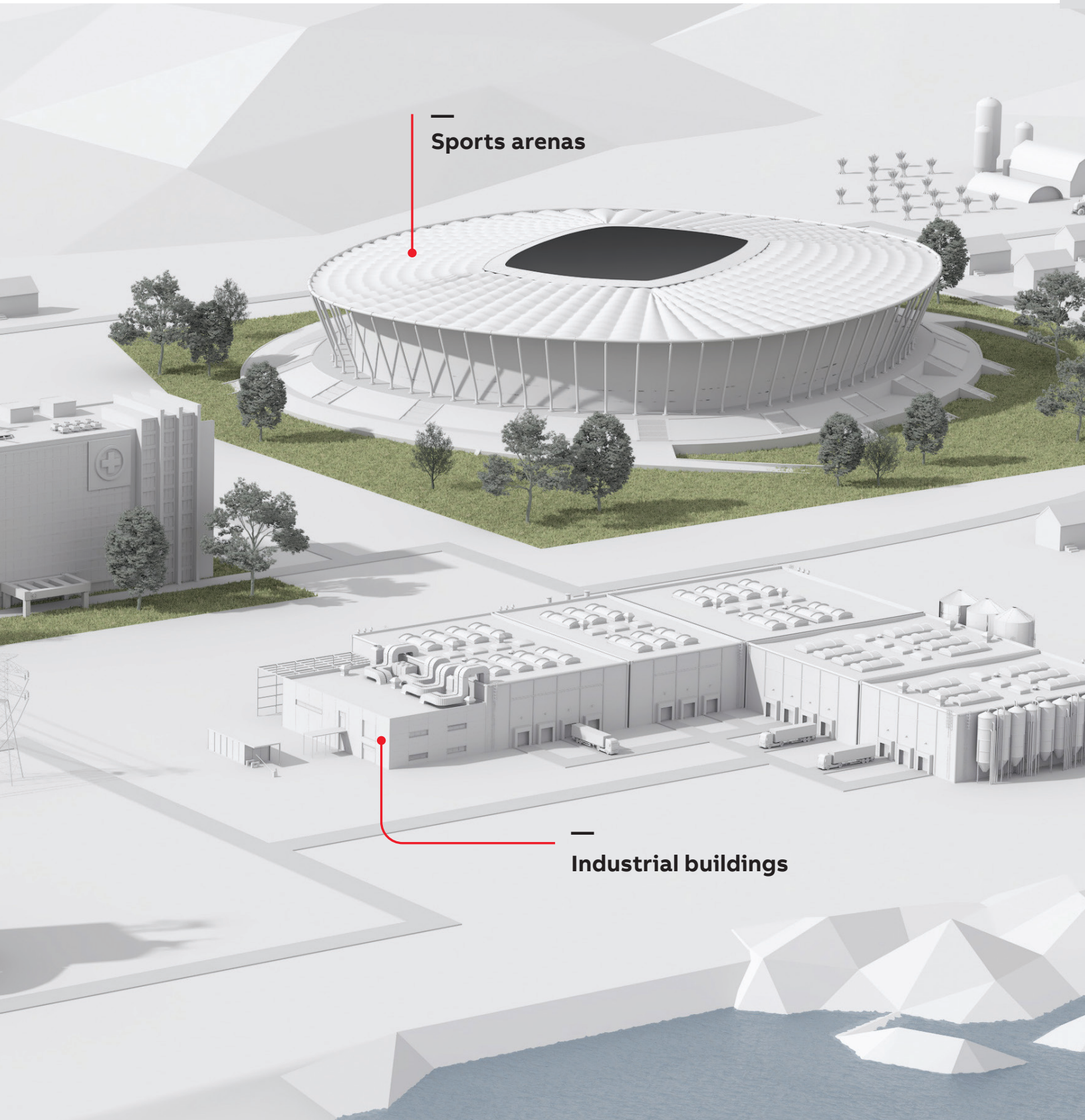
Sports arenas
Industrial buildings

Construction

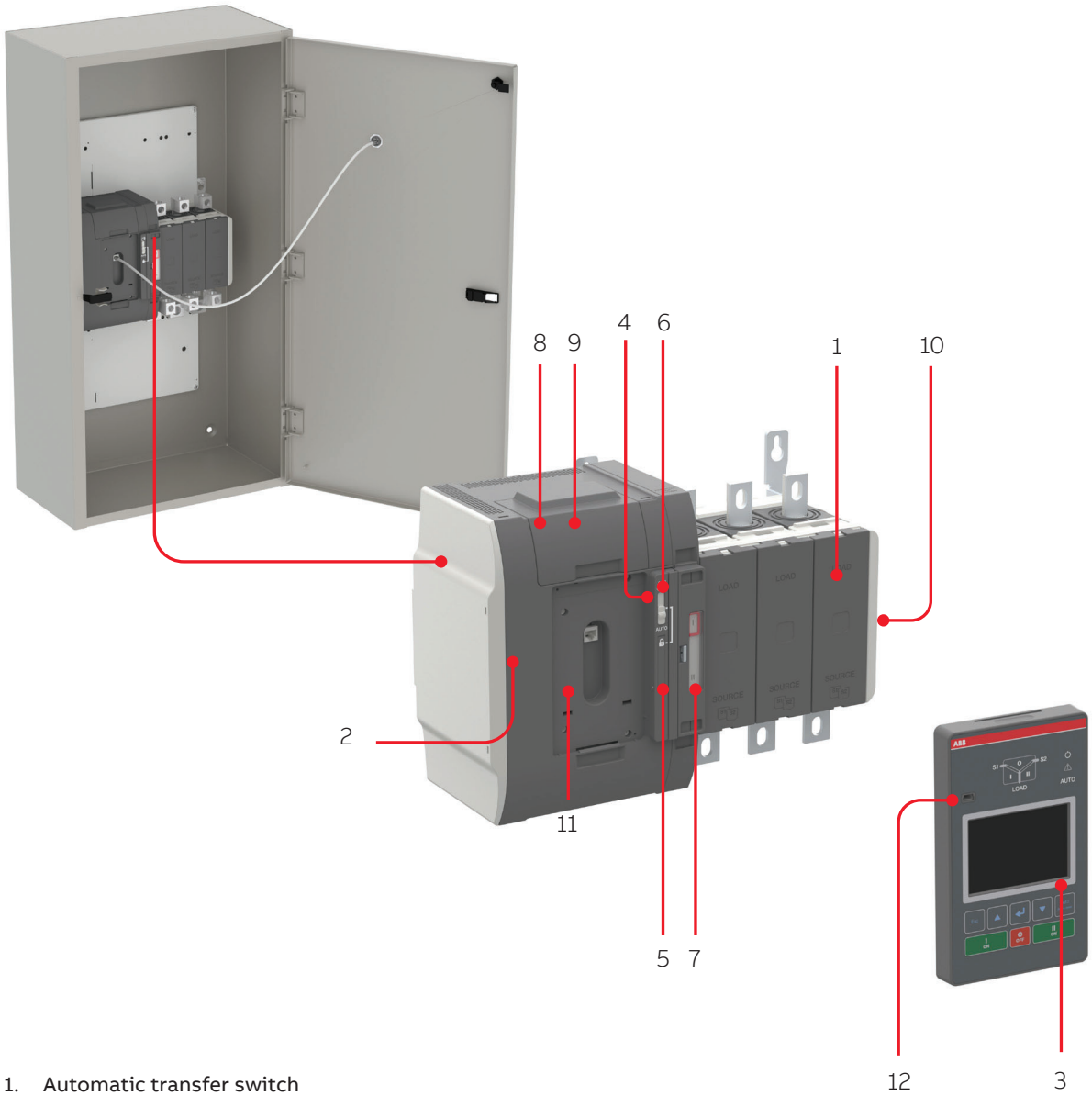

1. Automatic transfer switch
2. Embedded ATS control unit and mechanism
3. HMI unit, type ZTG LCD
4. Slide switch (Hand - Locking - AUTO) for selection of the operation mode
5. Padlocking the automatic transfer switch to prevent automatic and manual operation
6. Handle for manual operation
7. Position indication
8. Terminals for control circuit connections (behind the cover)
9. Place for connectivity modules (aux power supply, com and signaling)
10. Place for auxiliary contact block
11. Location of product identification label
12. Programming port, only for Ekip Programming module and Ekip Connect software

Features

Main features in the table below.
Consult ABB for more information.

	ZTG Controls
Ampere sizes available	UL: 30-1200 A
Rated voltage	200-480Vac
Rated frequency	50 / 60 Hz
Phase system	Single and Three
Number of poles	2, 3 and 4
Neutral configuration	
Switched	Yes
Product type	
Open transition (I-II)	Yes
Delayed transition (I-O-II)	Yes
Voltage and frequency settings	
Pick up Voltage Source 1	71-99%, 101-119%
Drop out Voltage Source 1 *	70-98%, 102-120%
Pick up Voltage Source 2	71-99%, 101-119%
Drop out Voltage Source 2 *	70-98%, 102-120%
Pick up Frequency Source 1	80.5-99.5%, 100.5-119.5%
Drop out Frequency Source 1	80-99%, 101-120%
Pick up Frequency Source 2	80.5-99.5%, 100.5-119. 5%
Drop out Frequency Source 2	80-99%, 101-120%
Time delay settings	
Override momentary Source 1 Outage, sec	0-60
Transfer from Source 1 to Source 2, sec	0-3600
Override momentary Source 2 Outage, sec	0-60
Transfer from Source 2 to Source 1, min	0-120
Generator stop delay, min	0-60
Center-OFF delay, sec	0-300
Pre-transfer delay S1 to S2, sec	0-300
Post-transfer delay S1 to S2 , sec	0-300
Pre-transfer delay S2 to S1, sec	0-300
Post-transfer delay S2 to S1, sec	0-300
Elevator Pre-signal delay S1 to S2, sec	0-60
Elevator Post-signal delay S1 to S2, sec	0-60
Elevator Pre-signal delay S2 to S1, sec	0-60
Elevator Post-signal delay S2 to S1, sec	0-60
Load shed delay, sec	0-300
Source failure detections	
No voltage	Yes
Undervoltage	Yes
Overvoltage	Yes
Phase missing	Yes
Voltage unbalance	Yes
Invalid frequency	Yes
Incorrect phase sequence	Yes

* Drop out voltage settings possible as low as 70% for 240V-480V systems.

Features

Main features in the table below.

Consult ABB for more information.

	ZTG controls
Controls	LCD + keys
LED indications for ATS, S1 and S2 status	Yes
Open transition - Standard digital inputs/outputs	1 / 1
Delayed transition - Standard digital inputs/outputs	2 / 1
Programmable digital inputs/outputs	Yes
Auto config (voltage, frequency, phase system)	Yes
Source priority	Source 1/2, No priority
Manual re-transfer	Yes
In-phase monitor (synchro check)	Yes
Genset exercising: on-load, off-load	Yes
In-built power meter module	No
Load shedding	Yes
Real time clock	Yes
Event log	Yes
Predictive maintenance	No
Voltage and current harmonics measuring	No
Field-mount accessories	
Auxiliary contacts for position indication	Yes
Digital input/output modules	Yes
12-24 Vdc aux supply module for controller	Yes
Communication modules	Yes
Connectivity capability	
Modbus RTU (RS-485)	Yes
Modbus/TCP	Yes
Profibus DP	Yes
ProfiNet	Yes
DeviceNet	Yes
Ethernet IP	Yes
Monitoring via ABB Ability™: Energy and Asset Manager	Yes
For applications	
Mains - Mains	Yes
Mains - Generator (minimum size 20kVA)	Yes
UL short circuit withstand ratings	
Coordinated breaker WCR	Yes

Description of basic functionality

Operation of time delays and corresponding relay output signals

Example for SOURCE 1 Priority, SOURCE 2 = Generator

The automatic switching sequence can be summarized in the following steps:

- An anomaly occurs on the SOURCE 1
- Override momentary S1 outage delay
- Generator start
- SOURCE 2 OK
- Transfer from S1 to S2 delay
- Pre-transfer signal on
- Load shed signal on
- Pre-transfer S1 to S2 delay
- Load shed delay
- Transfer switch (SOURCE 1) to the position O
- Center-off delay
  (only with Delayed transition I - O - II type)
- Transfer switch (SOURCE 2) to the position II
- Post-transfer S1 to S2 delay
- Pre-transfer signal off

The re-transfer sequence can be summarized in the following steps:

- The SOURCE 1 is restored
- Transfer from S2 to S1 delay
- Pre-transfer signal on
- Pre-transfer S2 to S1 delay
- Transfer switch (SOURCE 2)
  to the position O
- Center-off delay
  (only with Delayed transition I - O - II type)
- Transfer switch (SOURCE 1) to the position I
- Load shed signal off
- Generator stop delay
- Post-transfer S2 to S1 delay
- Pre-transfer signal off
- Generator stop
- SOURCE 2 off

SOURCE 1 priority (SOURCE 2 = generator)

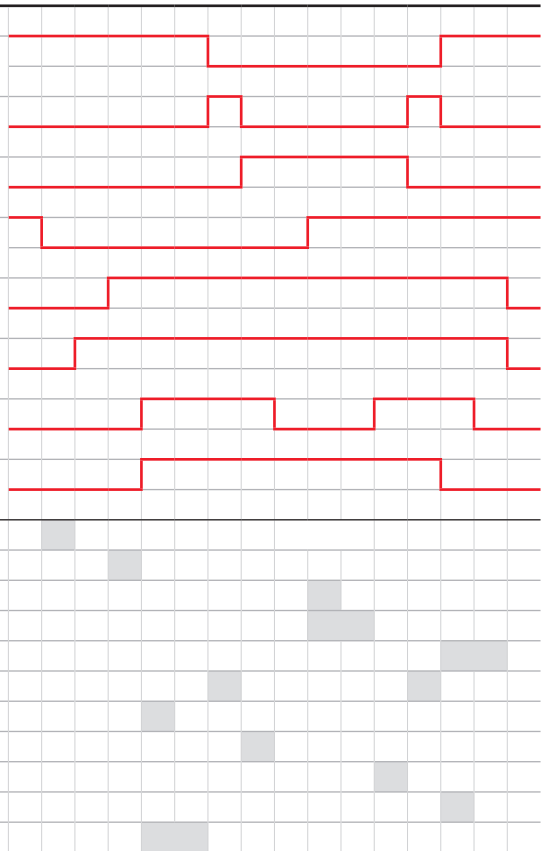

[1)] Off position included in sequence for delayed transition only

Ordering Information

Zenith ZTG ordering information

Part number codes

Understanding the type code keys below will help you quickly identify the correct product for your needs. The simple naming system allows you to see the products type, Ampere rating, standard classification and number of poles, all in one glance.

Explanation of the types ZTG Series

Z	G	D	M	3	X	X	1	2	-	C	X	3	X	E	4	X	X
1	2	3	4	5	6	7	8	9	10	11	12	13	14	15	16	17	18

1	**Zenith**
	Z
2	**Product Family**
G	ZTG
3	**Transition Type**
O	Open Transition
D	Delayed Transition
4	**Amperage**
A	30 Amps
B	60 Amps
C	100 Amps
D	125 Amps
F	160 Amps
G	200 Amps
J	260 Amps
K	400 Amps
L	600 Amps
M	800 Amps
N	1000 Amps
P	1200 Amps
5	**Phase**
1	1 Phase
3	3 Phase
6	**Neutral**
S	Switched neutral
X	No neutral
B	Solid neutral bar
7	**System voltage (Line to Line)**
X	T1 Panel - Voltage agnostic
8	**Enclosure**
1	Nema 1
2	Nema 12 / 4
3	Nema 3R
4	Nema 4X
5	Nema 3R w/ 208V heater/thermostat
6	Nema 3R w/ 240V heater/thermostat
7	Nema 3R w/ 480V heater/thermostat
9	**Panel Assembly**
2	Std application, Sources on Bottom

10	**(open)**
-	
11	**Aux Contacts**
X	No Aux Contacts
A	2 NO
B	2 NO and 2 NC
C	4 NO and 4 NC
D	8 NO
E	8 NC
12	**Metering Options**
X	No meter
A	M90 meter (120-240V)
B	M90 meter (480V)
C	M91 meter (120-240V)
D	M91 meter (480V)
13	**Ground Bar**
X	No ground bar, lug on cabinet
1	(3) #8-1/0 cables
2	(6) #8-1/0 cables
3	(6) #6-250MCM
4	(12) #6-250MCM
5	(8) #2-600MCM
14	**Lugs**
X	Mech Standard on ZTG
15/16	**Ekip Modules**
XX	See Table of values on Ekip table (next page)
17	**Open**
X	
18	
X	Standard design

Zenith ZTG extended range includes the following which are based upon the Zenith contactor-based ATS and MX150 controller. Please reference Zenith documents PB-1201 and PB-1301 for technical and ordering information.

- 1600-3000A ratings for full voltage range (120-600Vac)
- 40-1200A ratings for 120Vac and 600Vac
- Service entrance rated from 40-3000A, all voltages (ZTGSE and ZTGDSE)

Zenith ZTG ordering information

Ekip options

15/16	Ekip Modules
No Ekip adders	
XX	No additonal options
No communication	
XA	Aux Power Module Only
X2	2 additional I/O
X4	4 additional I/O
X6	6 additional I/O
1 communication module	
R2	Modbus RTU + 2 IO
R4	Modbus RTU + 4 IO
R6	Modbus RTU + 6 IO (only 400 Amps +)
T2	Modbus TCP + 2 IO
T4	Modbus TCP + 4 IO
T6	Modbus TCP + 6 IO (only 400 Amps +)
P2	Profibus + 2 IO
P4	Profibus + 4 IO
P6	Profibus + 6 IO (only 400 Amps +)
E2	Ethernet + 2 IO
E4	Ethernet + 4 IO
E6	Ethernet + 6 IO (only 400 Amps +)
D2	DeviceNet + 2 IO
D4	DeviceNet + 4 IO
D6	DeviceNet + 6 IO (only 400 Amps +)
N2	Profinet + 2 IO
N4	Profinet + 4 IO
N6	Profinet + 6 IO (only 400 Amps +)

Loose accessories

Zenith ZTG loose accessories order codes

Suitable for switches ZTG(D) 30-1200 A, 200-480 Vac

Type	Qty (pcs)	Order code	Weight (lb)
12-24 Vdc auxiliary supply module	1	OXEA1	0.09
Ekip Com Modbus RTU-OX	1	ZEAMOD485	0.44
Ekip Com Modbus TCP-OX	1	ZEAMODTCP	0.44
Ekip Com Profibus	1	ZEAPRFIBUS	0.44
Ekip Com Profinet	1	ZEAPRFINET	0.44
Ekip Com EtherNet / IP	1	ZEAETHRNT	0.44
Ekip Com DeviceNet	1	ZEADEVICNET	0.44
Ekip Com Hub	1	ZEAEKIPHUB	0.44
Ekip Signalling 2K-1-OX	1	2K-1-OX	0.44
Ekip Signalling 2K-2-OX	1	2K-2-OX	0.44
Ekip Signalling 2K-3-OX	1	2K-3-OX	0.44
Ekip Programming Module	1	ZEAEKPPGM	0.44
Ekip Bluetooth Programming Module	1	ZEABT	0.44
Normally Open Auxiliary Contact	10	OA1G10	0.07
Normally Closed Auxiliary Contact	10	OA3G01	0.07

[1] Packing materials must be added to weights provided

Technical data

Technical data

Zenith ZTG series 30-1200 A, 200-480 Vac

Zenith ZTG series technical data

			Zenith switch size (A)					
Data according to UL1008			**30**	**60**	**100**	**125**	**160**	**200**
Rated operational voltage		Vac	200 - 480					
Operating voltage range		Vac	160 - 576					
Rated frequency		Hz	50-60					
Emergency systems - Motor loads or total system		A	30	60	100	125	160	200
Optional standby systems - Motor loads or total system		A	30	60	100	125	160	200
Short-circuit withstand/closing and short-time current ratings		kA	See table A					
Contact transfer time I-II, II-I	Load interrupting time	ms	<50					
Operating transfer time I-II, II-I		ms	<500					
ATS current draw during transfer / time duration		A / ms	35 / <110					
Mechanical endurance	No. of operating cycles		6050	6050	6050	6050	6050	6050
Suitable for applications			Transformer - Transformer, Transformer - Generator					

Zenith ZTG series technical data

			Zenith switch size (A)					
Data according to UL1008			**260**	**400**	**600**	**800**	**1000**	**1200**
Rated operational voltage		Vac	200 - 480					
Operating voltage range		Vac	160 - 576					
Rated frequency		Hz	50-60					
Emergency systems - Motor loads or total system		A	260	400	600	800	1000	1200
Optional standby systems - Motor loads or total system		A	260	400	600	800	1000	1200
Short-circuit withstand/closing and short-time current ratings		kA	See table A					
Contact transfer time I-II, II-I	Load interrupting time	ms	<50					
Operating transfer time I-II, II-I		ms	<500					
ATS current draw during transfer / time duration		A / ms	35 / <110	40 / <130				
Mechanical endurance	No. of operating cycles		6050	4050	3050	3050	3050	3050
Weight without accessories	2-pole switch	pounds	29.3	37.2	37.2			
	3-pole switch	pounds	33.9	42.1	42.1	68.6	68.6	68.6
	4-pole switch	pounds	38.6	47.2	47.2	81.1	81.1	81.1
Suitable for applications			Transformer - Transformer, Transformer - Generator[1)]					

[1)] Minimum generator size: 20kVA

ZTG series Coordinated Breaker Withstand and Close-on Ratings (WCR)

ATS Rating (A)	Max Voltage (V)	Max coordinated breaker WCR (A)	Breaker manufacturers
30 - 200	480	150 000	ABB, GE, Schneider, Eaton, Siemens
260	480	200 000	ABB, GE, Schneider, Eaton, Siemens
400	480	150 000	ABB, GE, Schneider, Eaton, Siemens
600	480	200 000	ABB, GE, Schneider, Eaton, Siemens
800 - 1200	480	100 000	ABB, GE, Schneider, Eaton, Siemens

[1] For detailed WCR ratings by ATS and breaker type, please refer to document number 1SCC303015C0201, Zenith short circuit ratings

Technical data

Zenith ZTG series 30-1200 A, 200-480 Vac

ZTG series Testing and Standards Compliance

Description	Standard
UL, cUL listing	UL 1008
Conducted and radiated emissions	CISPR 11:2009, Class A
ESD immunity test	IEC/EN 61000-4-2 Class B
Radiated RF, electromagnetic field immunity test	IEC/EN 61000-4-3 10 V/m
Electrical fast, transient/burst immunity test	IEC/EN 61000-4-4
Surge immunity test	IEC/EN 61000-4-5 0.5 to 2 kV
Conducted immunity test	IEC/EN 61000-4-6
Voltage dips and interruption immunity	IEC/EN 61000-4-11
Harmonic voltage immunity test	IEC/EN 6100-4-13

ZTG series AL/CU UL Listed Solderless Screw-Type Terminals for External Power Connections

Model	Amperage	Cables per phase & neutral	Range of wire sizes	
ZTG ZTGD	30-60	1	12 - 2/0 AWG	(3 - 67 mm²)
	100-200	1	6 AWG - 300 kcmil	(14 - 152 mm²)
	260	1	2 AWG - 600 kcmil	(34 - 304 mm²)
	400	1 / 2	1x 4 AWG - 600 kcmil / 2x 1/0 – 250 kcmil	(1x 25 – 304 mm² / 2x 55 – 127 mm²)
	600	2	2 AWG - 600 kcmil	(34 - 304 mm²)
	800-1200	4	2 AWG - 600 kcmil	(34 - 304 mm²)

Auxiliary contacts

Technical data for auxiliary contacts according to IEC 60947-5-1, for OA1G_, OA3G_

AC15		DC12			DC13	
Ue/[V]	Ie/[A]	Ue/[V]	Ie/[A]	P/[W]	Ie/[A]	P/[W]
230	6	24	10	240	2	50
400	4	72	4	290	0.8	60
415	4	125	2	250	0.55	70
690	2	250	0.55	140	0.27	70
		440	0.1	44		

Dimension drawings

Dimension drawings

30-400A

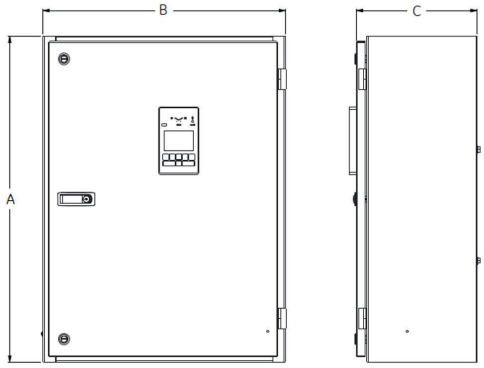

600A

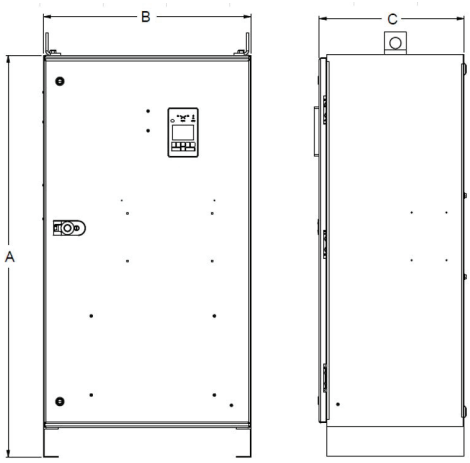

800-1200A

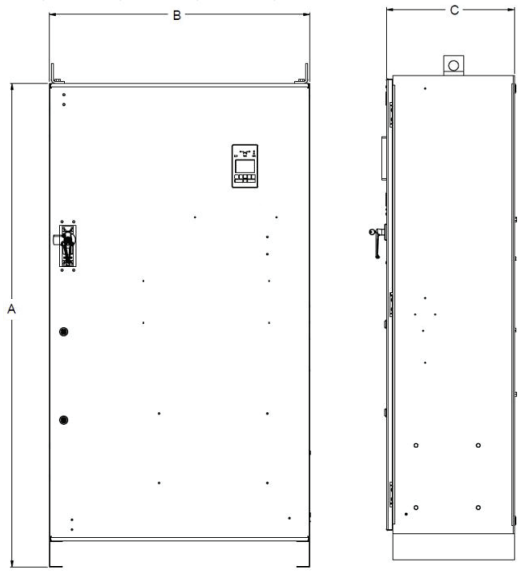

ZTG series dimensions and weights, UL Type 1 Enclosure

Model	ATS Rating (A)	Poles	Weight[1] lb (kg)	Dimensions,[2] in (mm) Height (A)	Width (B)	Depth (C)
ZTG ZTGD	30-200	2	89 (40)	32 (813)	24 (610)	12 (305)
		3	93 (42)	32 (813)	24 (610)	12 (305)
		4	98 (44)	32 (813)	24 (610)	12 (305)
	260	2	145 (66)	46 (1168)	24 (610)	14 (356)
		3	150 (68)	46 (1168)	24 (610)	14 (356)
		4	155 (70)	46 (1168)	24 (610)	14 (356)
		2	153 (69)	46 (1168)	24 (610)	14 (356)
		3	159 (72)	46 (1168)	24 (610)	14 (356)
		4	290 (131)	54 (1372)	28 (711)	19.5 (495)
	600	2	278 (126)	54 (1372)	28 (711)	19.5 (495)
		3	284 (129)	54 (1372)	28 (711)	19.5 (495)
		4	290 (131)	54 (1372)	28 (711)	19.5 (495)
	800-1200	3	482 (219)	74 (1880)	40 (1016)	19.5 (495)
		4	515 (234)	74 (1880)	40 (1016)	19.5 (495)

1. Special Enclosures Type 3R, 12, 4, and 4X weights are up to 22% greater than Type 1 Enclosures/
2. Special Enclosures Type 3R, 12, 4, and 4X dimensions differ. Consult Tech Support for details.
3. All dimensions and weights are approximate and subject to change without notice.
4. Packing materials must be added to weights shown. Allow 15% additional weight for cartons, skids, crates, etc.

—

ABB Zenith Controls, Inc.
305 Gregson Drive
Cary, NC 27511

24-hour support:
ABB Technical Services
+1 (800) 637-1738
epis.pqservice@abb.com

http://solutions.abb/zenith

1SCC303012C0201 - 21-03

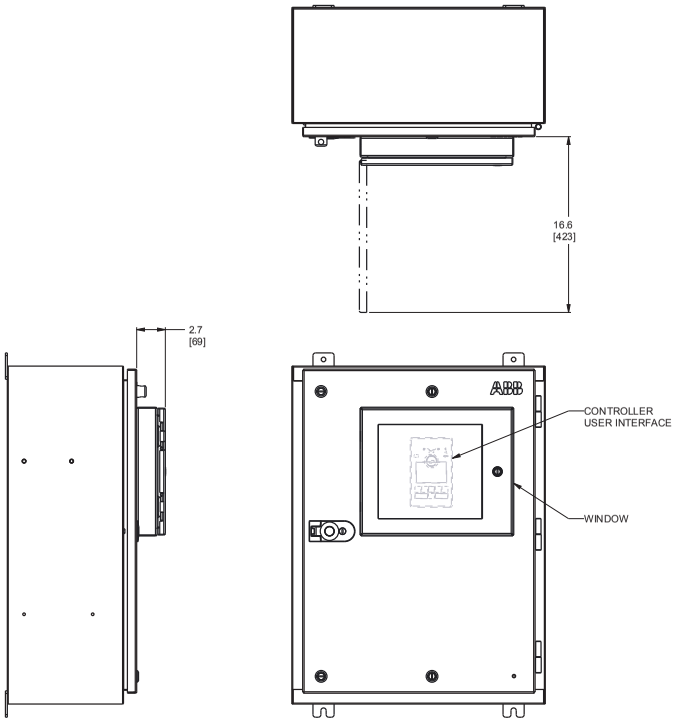

SIDE VIEW
4 AND 12

FRONT VIEW- 4 AND 12

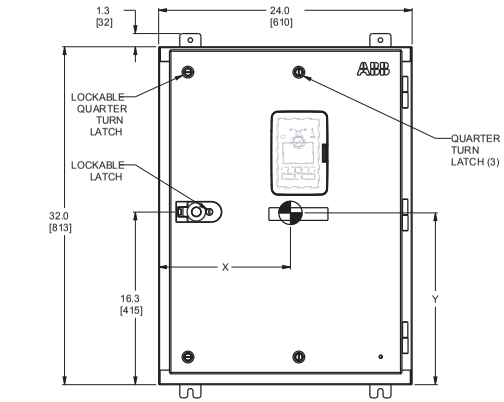

FRONT VIEW- 3R

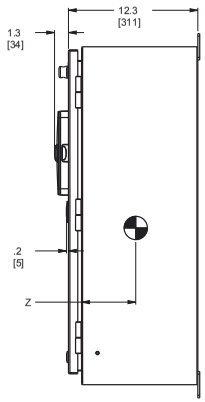

SIDE VIEW

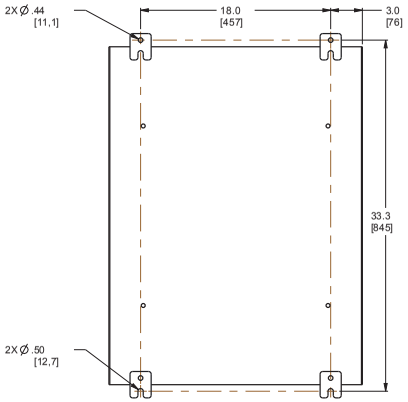

REAR VIEW

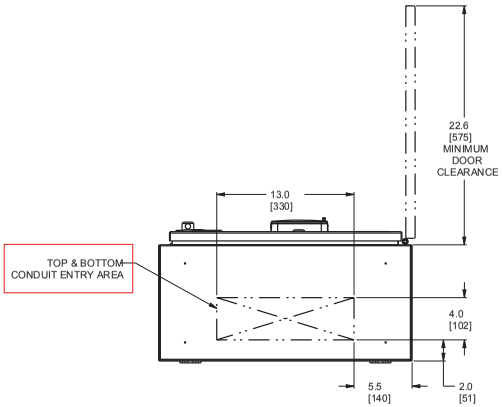

BOTTOM VIEW

AMP	POLE	CONTROLLER TYPE	CABINET #	LUG RANGE	WEIGHT	CENTER OF GRAVITY IN(MM)		
					LB(KG)	X	Y	Z
30-200A	2	SEE TABLE A	F-2011MP	QTY 1 4 AWG-300 KCMIL	106(48)	11.4 (290)	15.9 (405)	5.9 (149)
	3				110(50)			
	4				115(52)			

TABLE A - HMI			
TYPE	TRANSITION	LEVEL	PART NO.
ZTX	OPEN	2	OXAMI1-L2
ZTG	OPEN	3	OXAMI1-L3
ZTGD	DELAYED	3	OXBMI1-L3

NOTES
1. ENCLOSURE : NEMA-3R,4,12 TYPE, WALL MOUNT.
2. MATERIAL:14 GA (.0747) 1018 HRS REF.
3. FINISH : ANSI 61 GREY
4. CONSTRUCTION PER UL 1008 STANDARD.
5. FRONT ACCESSIBLE UNIT. NO SIDE OR REAR ACCESS REQUIRED.
6. SUITABLE WIRE BENDING SPACE PROVIDED PER THE SAFETY AGENCY STANDARDS.
7. UL AND CSA RECOGNIZED/CERTIFIED MECHANICAL LUGS ARE STANDARD.
8. EQUIPMENT GROUND LUG IS PROVIDED IN ALL UNITS. REFER TO SHEET 2 FOR DETAILS.
9. ALL DIMENSIONS ARE FOR REFERENCE ONLY AND SHOWN IN INCHES(MILLIMETERS).
10. 100% RATED SOLID/SWITCHED NEUTRAL PROVIDED PER THE SWITCH CONFIGURATION.
11. SUITABLE FOR TOP AND/OR BOTTOM CABLE ENTRY.

SEISMIC NOTES:

1. CENTER OF GRAVITY DIMENSIONS ARE FOR REFERENCE ONLY.
2. FOR WORKING CLEARANCE REFER TO NATIONAL AND LOCAL CODES AND STANDARDS.

Third Angle Projection

DRAWING FILE: 50C-1061	MODEL FILE: 50C-1061	ABB	
DATE MODIFIED: 22-Apr-19 10:47:56 AM	DESIGNED BY: APP		
Calculated for: VOLUME: 0.000 in^3	CN#: C067901	APPROVED BY: SR	TITLE: TruONE LAYOUT, 30A-200A NEMA 3R, 4, 12
	◇ Critical to Quality Characteristic		
MASS: 0.000 lbm	MATERIAL SPECIFICATION: ---	FINISH SPECIFICATION: ---	UNITS: in / LOCAL TITLE: ---
UNLESS OTHERWISE SPECIFIED	MATERIAL DESCRIPTION: ---		SIZE: D / ROOT NUMBER: 50C-1061 / REV: 1 / RELEASE STATE: In Work
TOLERANCE ON: 1 PL DECIMALS ± 0.1 2 PL DECIMALS ± 0.01 3 PL DECIMALS ± 0.005 ANGLES ± 1°	FINISH DESCRIPTION: ---		SCALE: 9:100 / PRODUCT LINE: ZTX/ZTG(D) / SHEET: 1 of 2

ul_3rd.dfrm

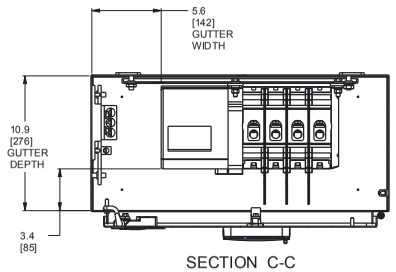

SECTION C-C
TOP VIEW
WITHOUT TOP PANEL

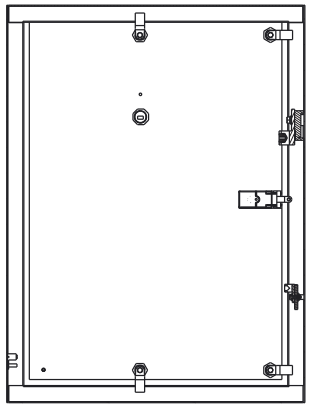

SECTION D-D
DOOR INSIDE VIEW

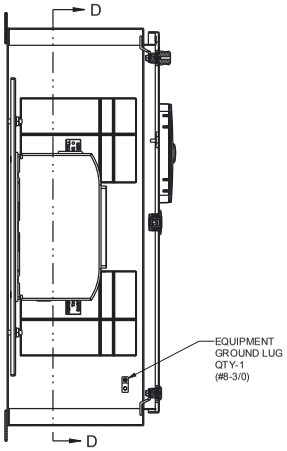

SECTION A-A
LEFT SIDE
WITHOUT SIDE PANEL

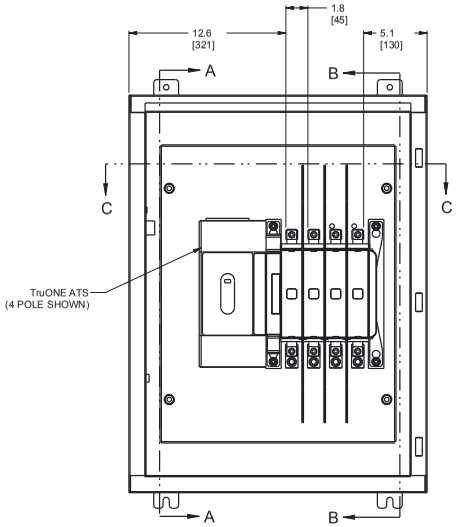

FRONT VIEW
WITHOUT DOOR

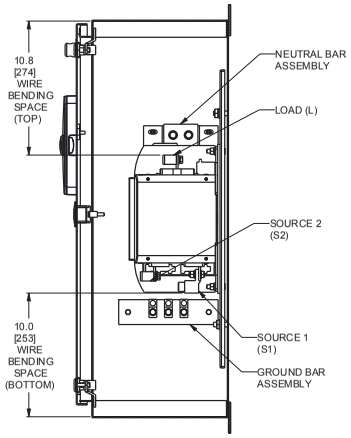

SECTION B-B
RIGHT SIDE
WITHOUT SIDE PANEL &
PHASE BARRIERS FOR CLARITY

NOTE:
1. REFER TO SHEET (1) FOR COMPLETE NOTE DETAILS
2. MECHANICAL LUGS SHOWN IN ABOVE VIEWS ARE FOR REFERENCE ONLY.

Third Angle Projection

ABB		
SIZE D	NUMBER 50C-1061	REV 1
SCALE 9:100	PRODUCT LINE ZTX/ZTG(D)	SHEET 2 of 2

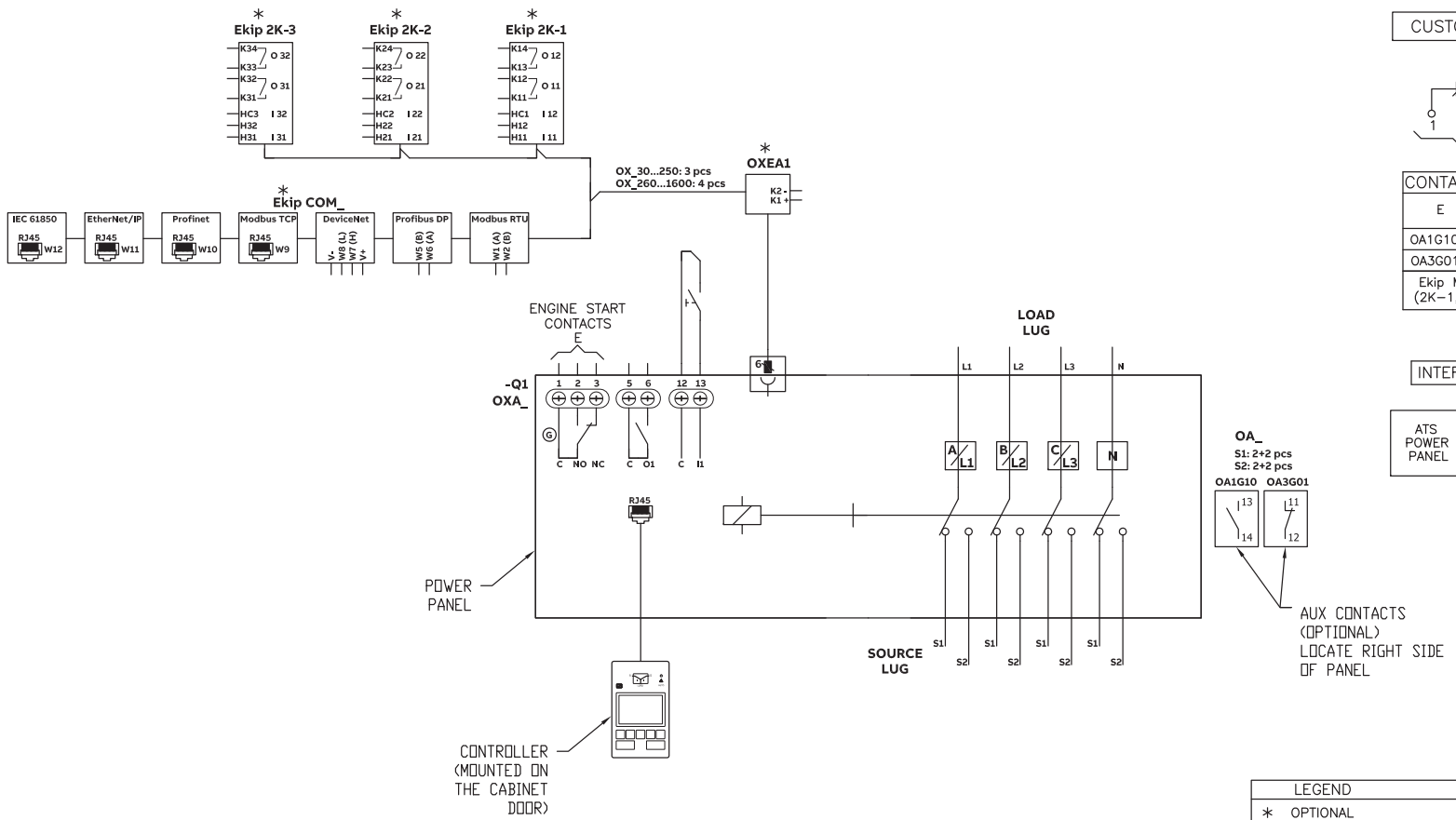

CUSTOMER CONNECTIONS

ENGINE START

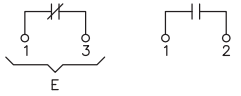

CONTACT	RATING
E	5 AMP @ 240 VAC 5 AMP @ 30 VDC
OA1G10 (N.O.)	10 AMP @ 125, 250 VAC
OA3G01 (N.C.)	10 AMP @ 125, 250 VAC
Ekip Module (2K-1, 2, 3)	4 AMP @ 240 VAC 2 AMP @ 30 VDC

INTERCONNECT PLUG DIAGRAM

LEGEND	NOTES
* OPTIONAL	

NOTES:

1. ATS SHOWN IN SOURCE 1 POSITION WITH NO POWER AVAILABLE.
2. REFER TO OPERATION AND MAINTENANCE MANUAL TO CONFIGURE THE OPTIONS.
3. # OF N.O. CONTACTS ON POWER PANEL WILL BE DIFFERENT BASED ON THE SWITCH AMPERAGE. REVIEW THE PRODUCT BROCHURE FOR THE DETAILS.

Third Angle Projection

DRAWING FILE 77A-2000	MODEL FILE 77A-2000	ABB	
DATE MODIFIED 27-Feb-19 07:54:08 AM	DESIGNED BY ---		
Calculated for: VOLUME 0.000 in^3	CN# CN-C067078	APPROVED BY ---	TITLE OPEN TRANSITION ATS SCHEMATIC FOR 30-1200A ZTG PRODUCT
	◇ Critical to Quality Characteristic		
MASS 0.000 lbm	MATERIAL SPECIFICATION UNASSIGNED	FINISH SPECIFICATION ---	UNITS in / LOCAL TITLE ---
UNLESS OTHERWISE SPECIFIED TOLERANCE ON: 1 PL DECIMALS ± 0.1, 2 PL DECIMALS ± 0.02, 3 PL DECIMALS ± 0.005, ANGLES ± 1.0	MATERIAL DESCRIPTION ---		SIZE B / ROOT NUMBER 77A-2000 / REV 1 / RELEASE STATE RELEASED
	FINISH DESCRIPTION ---		SCALE 1:1 / PRODUCT LINE ZTG / SHEET 1 of 1

us_3rd_b.frm

1 General Terms

This Rider incorporates by reference ABBGTC052020 Terms and includes the following additional provisions contained herein. In the event of a conflict between this Rider and ABBGTC052020, the Rider shall take precedence. Refer to the Operations Manual of each product for specific handling and storage requirements that may impact the warranty. This warranty is valid only in the United States.

2 Surge Protective Devices (SPD)

2.1 ABB Wall mount SPD, Box Extension, and Integral/Factory installed product

The Warranty period for the ABB TLE, TME, TPME, TPHE Series Wall Mount SPD Products, the ABB TPME and TPHE Series Integral Mount SPD Products, and the ABB TPME and TPHE Series Box Extension SPD products is ten (10) years from the date of shipment from Seller's facility.

2.2 Current Technology SPD products

The Warranty periods for Current Technology Series SPD products are as follows: Series SL3 is twenty (20) years. Series TG3, PX3, CGP3, ISM and HPI are fifteen (15) years. Series CG3 is ten (10) years. All warranty periods for these products begin from the date of shipment from Seller's facility.

3 Automatic Transfer Switches (ATS), Zenith, legacy or T-series

3.1 Z(B)TE, Z(B)TS, ZTG, and TruONE open style (level 3 or 4 controls)

The Warranty period for ZTE, ZBTE, ZTS, ZBTS, ZTG, and TruONE open style (level 3 or 4 controls) transfer switch Products is twenty-four (24) months from the date of shipment.

3.2 ZTX and TruONE Open Style (level 2 controls)

The Warranty period for ZTX and TruONE open style (level 2 controls) transfer switch Products is twelve (12) months from the date of shipment.

4 Replacement Parts

Replacement parts are warranted for a period of ninety (90) days when installed by an authorized Seller factory or authorized Seller service station.

5 Uninterruptible Power Supply (UPS)

5.1 SG, DPA, TLE High Power, MegaFlex Series UL

The Warranty period for SG, DPA, TLE 160kW to 1MW, and MegaFlex Series UL UPS Products is eighteen (18) months from date of shipment from Seller's facility.

5.2 TLE Scalable, LP33, LP11, GT, VH Power Value Series UL

The Warranty period for TLE Scalable 40 – 150kW, LP33, LP11, GT, VH and Power Value Series UL UPS Products is twenty-four (24) months from the date of shipment from Seller's facility.