HIPOWER®

AGRICULTURE & POULTRY
GENERATOR SET

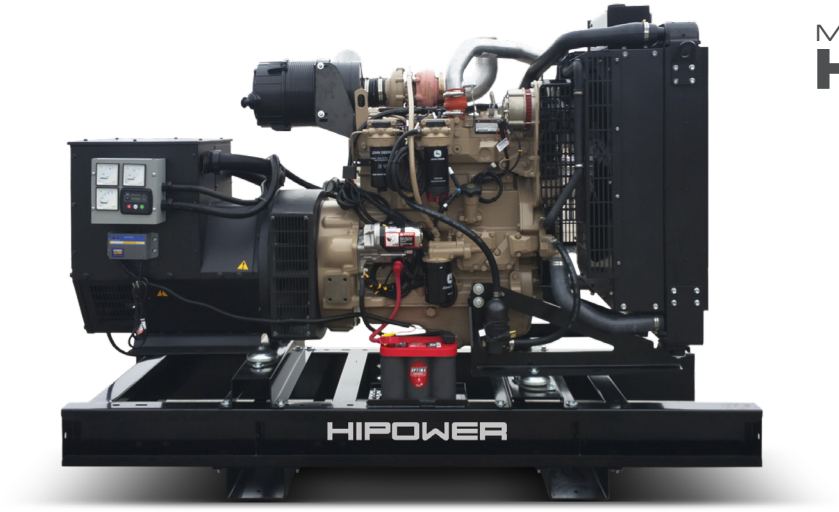

MODEL
HJW 100 M6A

Powered by:
JOHN DEERE

60Hz POWER RATINGS kW (kVA)

Voltage VAC	Phase	PF	Standby		Prime* (for reference only)	
			kW	kVA	kW	kVA
240/120 V	1 Phase	1.0	101	101	91	91

Rating Definitions: (N/A = Not available for model designated)

Overview of the HIPOWER® John Deere series of Agricultural Generator

HIPOWER® Agricultural Industrial generators are factory-built in facilities that utilize the latest technology in sheet metal fabrication, mechanical and electrical component assembly, production and testing.

Each model is the result of computer aided design and modeling backed up by exhaustive prototype-testing. Our development technology results in a unique range of inovative designs for highly reliable generator sets backed-up by a limited warranty covering all components.

Standard Configuration of Industrial Sets

- **John Deere Diesel Engine.** Long-life, heavy-duty, 4-cycle, direct injection engine from a world renown manufacturer for economy of operation and maximum reliability and durability. Capable of full rated load acceptance in one step.
- **Cooling.** Radiator with belt driven pusher fan.
- **Filtration.** Heavy duty replaceable element air-cleaner
- **Alternator.** Single bearing, 4-pole, rotating field, self-excited, self-ventilated, 12-wire re-connectable, 60Hz brushless alternator with Class H insulation. Automatic voltage regulator (AVR) providing close voltage regulation.

Standard Features of Industrial Sets

- 2 years or 1000 hours limited warranty given as standard. Extended warranties offered as options to the standard
- Base set meets NFPA 110, Level 1, when accessorized with the required equipment and installed per NFPA standards.

Codes and Standards Compliances used where applicable

HIPOWER®

HIMOINSA POWER SYSTEMS, INC. 16600 South Theden Street, Olathe, KS 66062 Tel: 913 495 5557 | Fax: 913 495 5575 www. hipowersystems.com

HIPOWER®

MODEL
HJW 100 M6A
AGRICULTURE & POULTRY **GENERATOR SET**

Governor regulation class	ISO 8528 Part 1 Class G3
Voltage regulation, no load to full load	plus or minus 1%
Frequency regulation	Ischronous
Radio frequency emissions compliance	Meets requirements of most industrial and commercial applications
skVA at 240V volts with 30% voltage dip	270

ENGINE SPECIFICATION	
Manufacturer	John Deere
Model	4045HF285-118
EPA certified	Tier 3
Crankshaft speed	1,800 rpm
Type	Diesel, 4-stroke
Injection	Unit injection
Aspiration	Turbocharged
Number of Cylinders	4
Cylinder arrangement	In-line
Displacement CID (liters)	275 (4.5)
Bore and Stroke ins (mm)	4.19 X 5.00 (106 X 127)
Nominal power	158.0 hp
Cooling	Liquid
Governor	Electrical
Starting motor & alternator	12 volt
Compression ratio	19.0:1
Air cleaner type	Medium duty - double cartridge
Exhaust gas flow cu. ft./minute (cu. /minute)	805 (22.8)
Max. Exhaust temp at full load degrees °F (°C)	1076 (580)
Max. permissible back pressure - ins H2O (kPA)	30.0 (7.5)
COOLING SYSTEM	
Engine cooling air flow - cu. ft./second (cu. m/second)	166.8 (4.7)
Alternator cooling flow - cu. ft./second (cu. m/second)	21.79 (0.61)
Total cooling air flow (engine + alternator + combustion)	193.4 (5.48)
Total cooling capacity - US gallons (liters)	7.0 (26.7)
LUBRICATION SYSTEM	
Oil pan capacity - US gallons (liters)	3.17 (12.00)
Oil pan capacity with filter - US gallons (liters)	3.96 (15.00)
Oil cooler	Water cooled
Recommended lubricating oil grade	15W-40 or API CI-4 PLUS or CI-4I
Oil consumption at full load	less than 0.1% of fuel consumption
Oil pressure – psi (kPA)	46 (320)
ENGINE ELECTRICAL SYSTEM	
Starting motor voltage	12 volt
Battery capacity	180 amps
Cold Cranking Amps - minimum	800 amps
Alternator Charger	14V - 75 AMP

Codes and Standards Compliances used where applicable

Certified ISO 9001 by BVQI · SAE · MEMBER EGSA Electrical Generating Systems Association · American Rental Association ASSOCIATE MEMBER · AEM MEMBER · UL

HIPOWER®

HIPOWER®

MODEL
HJW 100 M6A
AGRICULTURE & POULTRY **GENERATOR SET**

FUEL SYSTEM		
Recommended fuel	# 2 Diesel - ULSD	
Fuel supply line, min. ID mm(in.)	11.0 (0.44)	
Fuel return line,min. ID, mm (in.)	6.0 (0.25)	
Max. lift, fuel pump, type, m (ft)	Engine-Driven, 1.8 (6.0)	
Fuel filter	2µm @ 98% Efficiency	
FUEL CONSUMPTION	**Standby Power Rating**	**Prime Power Rating**
100% load – US gallons/hour	7.5	6.93
75% load - US gallons/hour	6	5.2
50% load - US gallons/hour	4.3	3.9
25% load - US gallons/hour	2.3	2.92
ALTERNATOR SPECIFICATION		
Manufacturer	Stamford	
Model	UCI 274 E Winding 06	
Voltages	1-phase 120/240	
Alternator Type	4-pole, rotating field	
Excitation System	Brushless with AVR AS 440	
Power factor	1.0	
Number of leads	4	
Stator Pitch	2/3	
Insulation	Class H	
Windings – Temperature Rise	125° C	
Enclosure (IEC-34-S)	IP 23	
Bearing	Single, sealed	
Coupling	Flexible disc	
Amortisseur windings	Full	
Voltage regulation – no load to full load with DSR AVR	± 1%	
TIF	< 50	
Line harmonics	5% maximum	
Standard Features: (see back-page for control panel details)		
Radiator with pusher fan	All rotating components (i.e. fan) protected with metal guards	
Medium - duty, two-stage dry element	Steel base for mounting on fuel tank and/or concrete surface	
Heavy-duty engine start batteries in rack with cables	Industrial Muffler supplied loose	
External emergency stop switch	Digital control panel	
6A Battery Charger	Alternator Junction box	
120V Engine Block Heater	15' Flex fuel line extention	
Available options		
MLCB installed	Murphy radiator level sensor	
Coolant level sensor	Exhaust flex pipe (supplied loose)	

Codes and Standards Compliances used where applicable

HIPOWER®

Generator Digital Control Panel - for manual, automatic and remote control

HIPOWER DSE 7310 Control Panel: HIPOWER's auto-start control panel DSE 7310 is supplied by Deep Sea Electronics with a manual or auto start selection switch with push button reset. Displays with indication of: phase to neutral voltage, voltage between phases, current (amps) per phase, frequency, power factor, kW and kVA outputs, fuel level, engine speed, hours run, battery voltage and battery charge voltage.

Engine and generator alarms for: battery charge failure, emergency stop activated, over-speed, under-speed, low oil pressure, high coolant temperature, low coolant level, low fuel level, overload, unbalanced voltage, over and under voltage, over frequency, short circuit, inverse power and incorrect phase sequence. All protections are programmable to: Warning alarm without engine shutdown or alarm with engine shutdown, with or without cooling period. Warning alarms for: low fuel level, battery voltage failure and battery charging alternator failure

Alternator alarms included: Overload, unbalanced voltage, over voltage, under voltage, over frequency, under frequency, short circuit, reverse power, and incorrect phase sequence.

Control Panel RH for manual, automatic & remote control

Model HJW 100 M6A Open Set - key dimensions

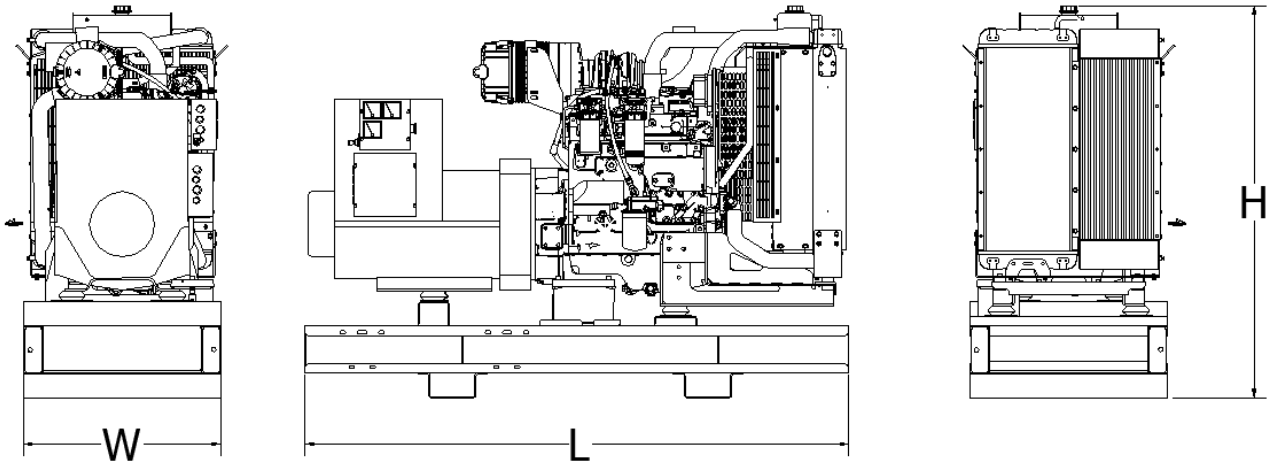

Configuration	Generator Data *				
	L = Length	W = Width	H = Height	Weight lbs	dBA
Open Set	86.6"	35"	62"	2580	TBA

Codes and Standards Compliances used where applicable

HIPOWER®